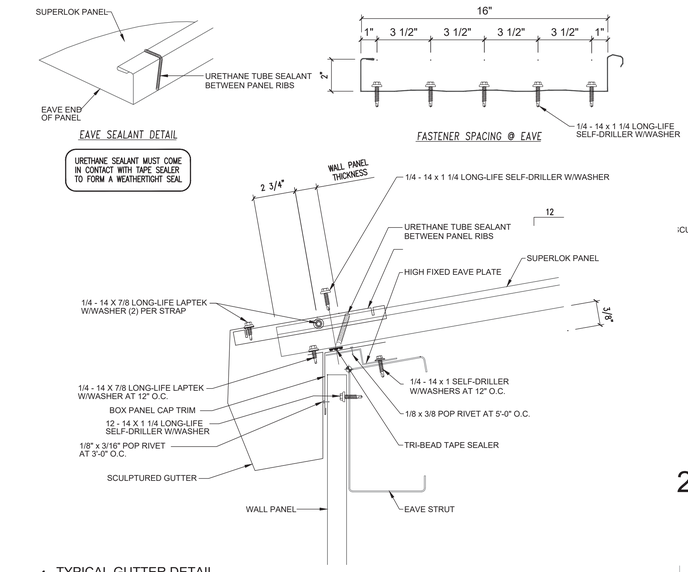

1 TYPICAL GUTTER DETAIL
SCALE 3"= 1'-0"

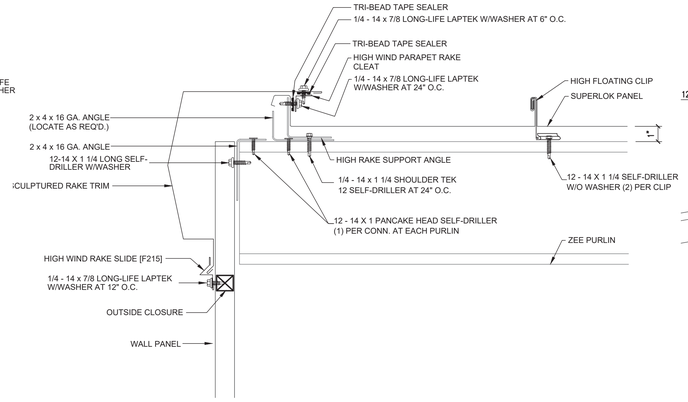

2 TYPICAL RAKE DETAIL
SCALE 3"= 1'-0"

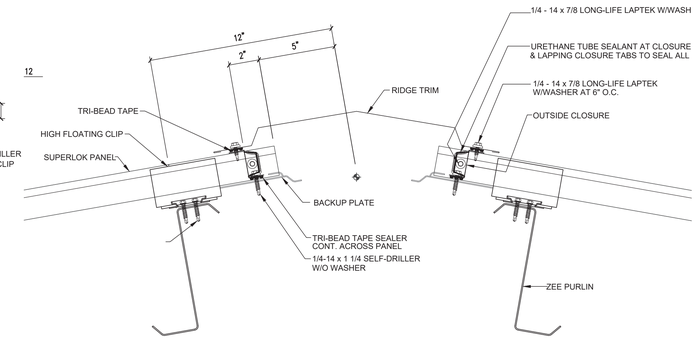

3 ROOF CAP DETAIL
SCALE 3"= 1'-0"

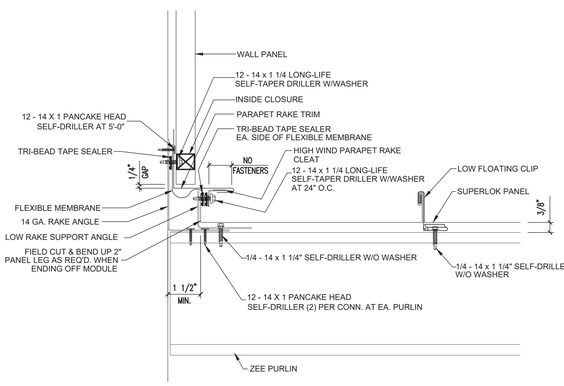

4 ROOF TO WALL DETAIL
SCALE 3"= 1'-0"

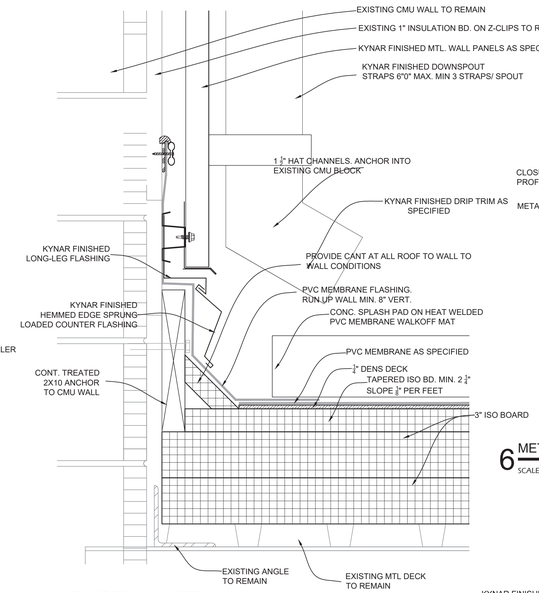

5 ROOF TO WALL DETAIL
SCALE 3"= 1'-0"

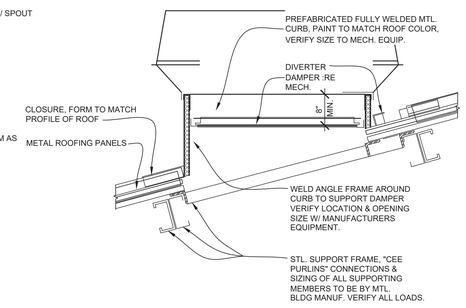

6 METAL ROOF CURB DETAIL
SCALE 3"= 1'-0"

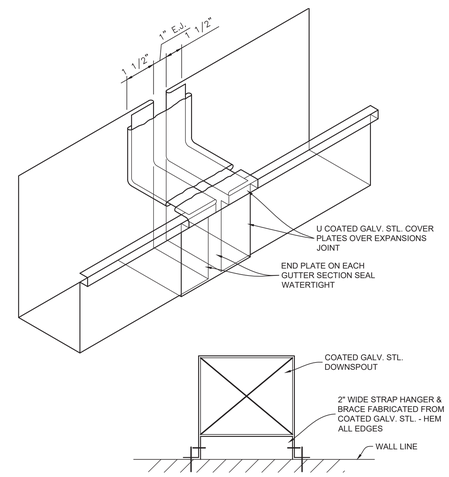

7 TYPICAL GUTTER & DOWNSPOUT DETAIL
SCALE 3"= 1'-0"

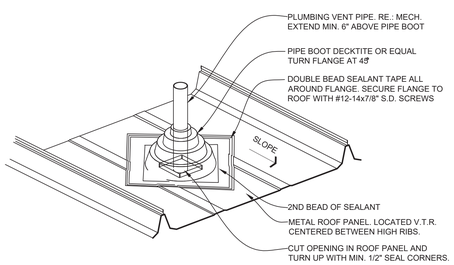

8 VENT THROUGH ROOF DETAIL
SCALE 3"= 1'-0"

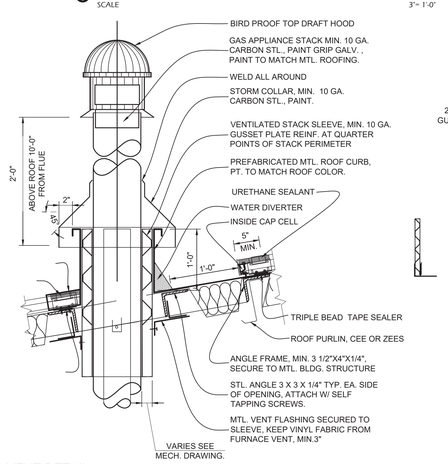

9 GAS VENT DETAIL
SCALE 3"= 1'-0"

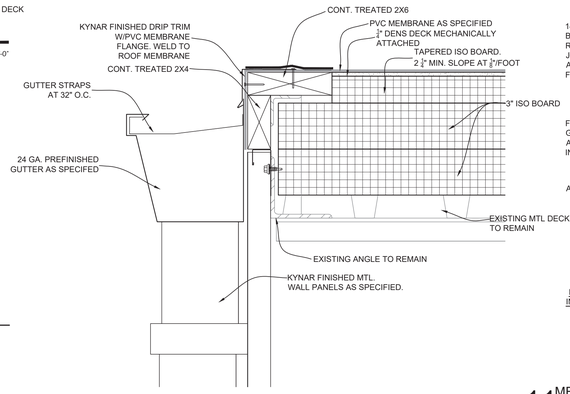

10 TYPICAL GUTTER DETAIL AT PVC ROOF
SCALE 3"= 1'-0"

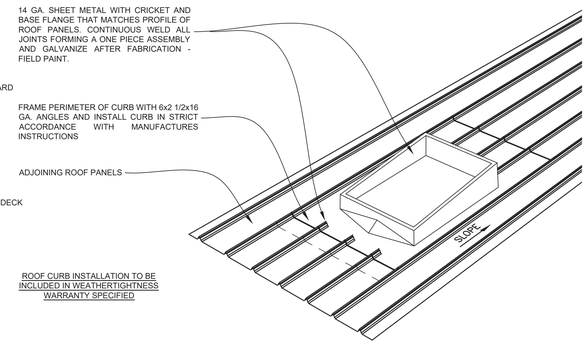

11 METAL ROOF CURB DETAIL
SCALE NTS

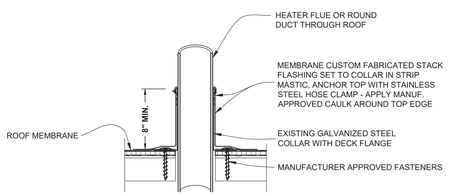

12 VENT THROUGH ROOF DETAIL
SCALE 3"= 1'-0"

YEAGER, WATSON & ASSOCIATES, LLC
ARCHITECTS
TELEPHONE: (318) 202-5708
FACSIMILE: (318) 202-5722
118 SOUTH TRENTON STREET
RUSTON, LOUISIANA 71270

IMPROVEMENTS TO J.I. BARRON ELEMENTARY SCHOOL

PINEVILLE, LA
RPSB# 52-26-01

Owner : Rapides Parish School Board

Pineville, Louisiana

PERRY W. WATSON No. 29095 STATE OF LOUISIANA

BUILDING SECTIONS

REVISIONS:

DATE: SEPTEMBER 2025

JOB NUMBER: 2025-02

A402